FIXED SOCKET FOR RG 401/U-TYPE 7-16

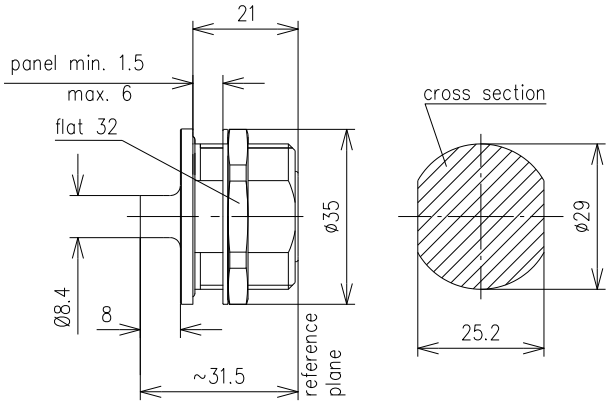

Part number	**BN 80 77 33**	
Connector type	7-16 socket	
Version	soldered	
Impedance	50 Ω	
Frequency range	0 - 2 GHz	
VSWR	≤ 1.06	
Intermodulation (IM3) 2x20W	≤ -165 dBc	
Material and surface		
Inner conductor	copper alloy	silver-plated
Outer conductor	copper alloy	silver-plated
Other metal parts	copper alloy	silver-plated
Insulation	PTFE	
Sealing	silicone rubber	
Degree of protection	IP68 (mated)	
Cable compatibility	RG 401/U	
Standards	IEC 61169-4	
Installation instructions	M30418	
Weight	approx. 0.09 kg	
Included in delivery	installation instructions	
Delivery status	inner conductor, sealing, nut, washer attached separately	