Rotary Joint || BN 634786

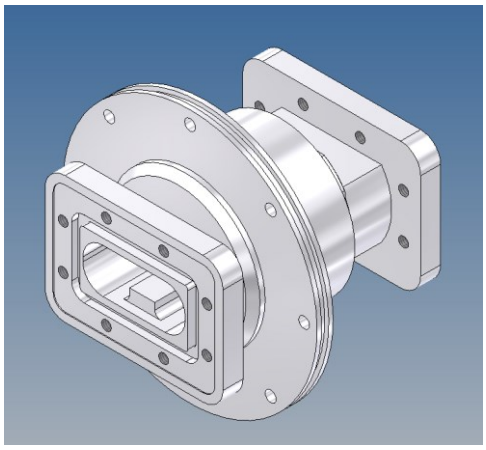

Radio frequency characteristics

Waveguide interface aperture	R 48 per IEC 60153-2 (WR 187 per EIA RS-261)
Waveguide interface connector	PDR 48 per IEC 60154-2
Interface type /material / surface finish	Aluminum alloy
Interface orientation	style I
Frequency range	4.4 to 5.0 GHz
Peak power capability	10 kW @ 3000 m max. altitude
Average power capability	600 W
VSWR, max. / typ.	1.20 / 1.10
VSWR variation over rotation, max. / typ.	0.1 / 0.05
Insertion loss, max. / typ.	0.15 dB / 0.05 dB
Insertion loss variation over rotation, max. / typ.	0.05 dB / 0.02 dB

Mechanical characteristics

Rotating speed, max. / nominal	300 rpm / 200 rpm
Rotating direction (view from the top)	both directions
Life, min.	200 x 10^6 revolutions
Torque (room temperature), max.	0.2 Nm @ start-up 0.2 Nm @ rotation
Interface loads, max.	±15 N in axial direction ±15 N in radial direction
Case material	aluminum alloy, sea water resistant
Case surface finish	no finish
IP protection level	IP40
Weight, approx.	0.8 kg
Marking	laser engraving

Template TD-00003F

Rotary Joint || BN 634786

Environmental conditions

Operation	
Ambient temperature range	-40 to +71°C
Relative humidity, max.	95% (non-condensing)
Storage	
Ambient temperature range	-55 to +85°C
Relative humidity, max.	95% (non-condensing)

Applicable documents

Drawing	634786-0E, Issue A
Technical information	“Rotary Joints – Glossary”, Technical Document TD-00021, Spinner GmbH